This drawing and specifications, herein, are the property of Digital Equipment Corporation and shall not be reproduced or copied or used in whole or in part as the basis for the manufacture or sale of items without written permission. OCTOBER 1972

ECO No. A242-00003 Sheet 2 of 3

SIZE	CODE	NUMBER	REV.
D	CS	A242-Ø-1	D

NOTES:

1. C5, C6, C7, & C8 ARE OPTIONAL CAPACITORS TO BE INSTALLED WHEN NEEDED. SEE MAINTENANCE MANUAL FOR PROPER USAGE.
2. E1, E5, E6 & E10 MAY BE DIP'S OR TØ5 CAN'S.
3. JUMPERS W1 THRU W16 ARE NOT OPTIONAL THEY ARE ALWAYS INSTALLED.
4. JUMPERS WA, WB, WC, OR WD MAY BE REMOVED DURING CALIBRATION. THEY MUST BE REINSTALLED IF E1, E5, E6, OR E10 IS REPLACED BEFORE CALIBRATION.
5. ALLOWABLE COMPONENT SUBSTITUTIONS:
   ITEM 14 CAN BE 1K, .01%, 1305509
   ITEM 15 CAN BE 4K, .01%, 1305511
   ITEM 13 CAN BE 63.4K .1% 1309289 (MUST SUBSTITUTE ALL 4/CHANNEL)

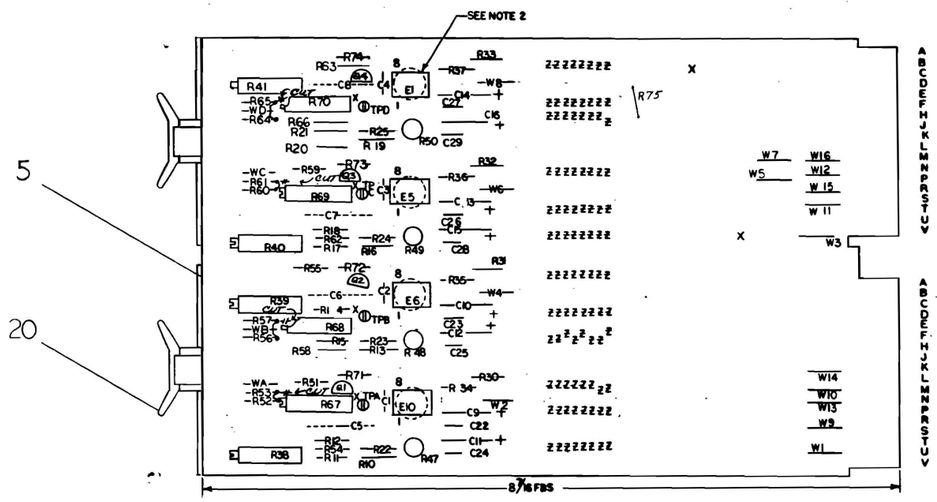

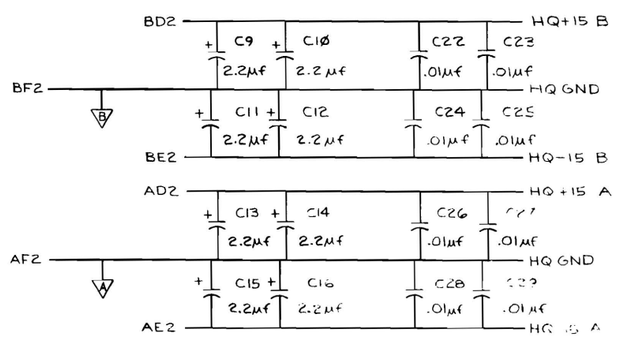

QTY	REF DESIGNATION	DESCRIPTION	PART NO.	ITEM NO.
1	R75	RES. 20K 5% 1/4W	1302391	23
4	Q1 THRU Q4	TRANSISTOR, PNP DEC6534D	1503409	22
20		JUMPER, WHITE BODY INSULATED	9009185	21
2		HANDLE, FLIP-CHIP, AMBER	9008337-0	2Ø
4		SPLIT LUG	9006735	19
4	R54, R58, R62, R66	RES. 4.7M 5% 1/4W	1309341	18
4	R47 THRU R5Ø	RES. 200 10% 1/2W 62PR	1309150-10	17
4	R38 THRU R41	RES. 500 10% 3/4W 76PR	1309143-06	16
4	R34 THRU R37	RES. 4K .1% 1/8W MF	1305354	15
4	R3Ø THRU R33	RES. 1K .1% 1/8W MF	1304865	14
16	R1Ø THRU R25	RES. 64K .1% 1/8W MF	1305515	13
4	E1, E5, E6, E10	OPER. AMPLIFIER-201A	1911143	12
4	R67 THRU R70	RES. 20K 10% 3/4W 76PR	1309143-11	11
12	R51 THRU R53, R59 THRU R61 R55 THRU R57, R63 THRU R65	RES. 10M 5% 1/4W	1302666	1Ø
4	R71 THRU R74	RES. 3K 5% 1/4W	1300432	9
8	C22 THRU C29	CAP. .01µf 10% 100V DISC	1001610-01	8
8	C9 THRU C16	CAP. 2.2µf 10% 20V	1002627	7
4	C1, C2, C3, C4	CAP. 10PF 5% 100V D.M.	1000006	6
4		EYELET	9006732	5
1		ETCHED CIRCUIT BOARD	5010192	4
REF		MODULE ECO HISTORY	B-MH-A242-Ø-6	3
REF		ASSY/DRILLING HOLE LAYOUT	D-AH-A242-Ø-5	2
REF		X-Y COORDINATE HOLE LOCATION	K-CO-A242-Ø-4	1

PARTS LIST

FIRST USED ON OPTION MODEL: LPS11-S

ETCH BOARD REV: B

IC TYPE	GND	+ 5V
GND AND 5V ARE USUALLY PIN 7 AND 14 RESPECTIVELY EXCEPTIONS ARE STATED ABOVE		

IC PIN LOCATIONS

INTERCHANGE			
DEC NO.	EIA NO.	DEC NO.	EIA NO.

SEMICONDUCTOR CONVERSION CHART

REV	CHANGE NO.	CHK
B	A242-00001	J. LIDSON 1-3-73
C	00036	1-17-73

REVISIONS

DRN. Cranfordy DATE 9-6-72
CHK'D. NANCY HOORE DATE 11-1-72
ENG. DATE 11-14-72
PROJ. ENG. DATE 11-14-72
PROD. L. M. Nugent DATE 11/14/72
NEXT HIGHER ASSY
SCALE NONE
SHEET 1 OF 2

digital EQUIPMENT CORPORATION MAYNARD, MASSACHUSETTS

TITLE: 4 CHANNEL ±1V IN ±5V OUT PREAMP

SIZE	CODE	NUMBER	REV.
D	CS	A242-Ø1	D

DIST.

BRUNING 40-522 16699
DEC FORM NO DRD 135A

This drawing and specifications, herein, are the property of Digital Equipment Corporation and shall not be reproduced or copied or used in whole or in part as the basis for the manufacture or sale of items without written permission.

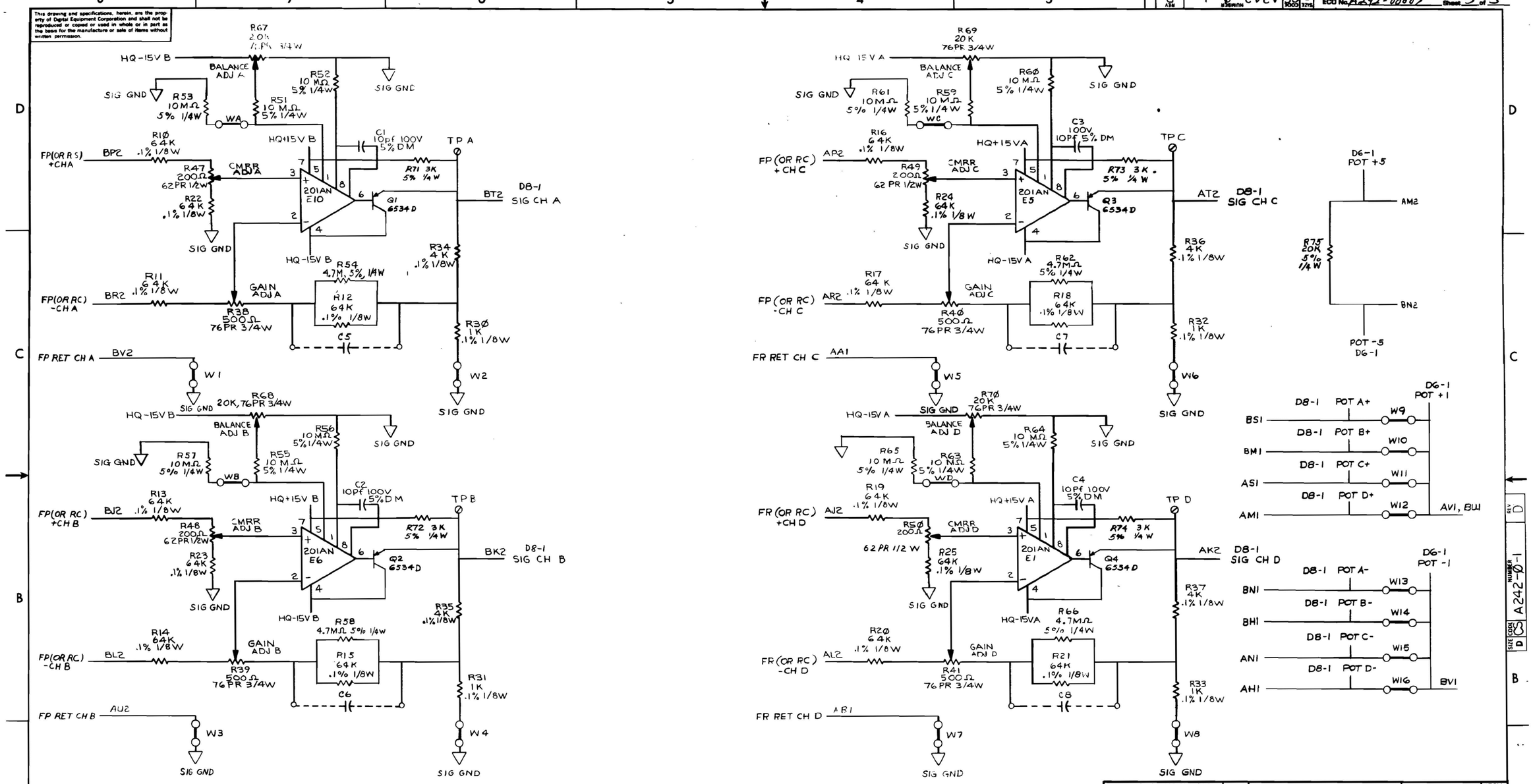

FIRST USED ON OPTION/MODEL	QTY.	DESCRIPTION	PART NO.	ITEM NO.
LPS11-S		PARTS LIST		

UNLESS OTHERWISE SPECIFIED DIMENSION IN INCHES. TOLERANCES

DECIMALS	ANGLES
XXX = .005 .XX = .02 .X = .1	±0° 30'

REMOVE BURRS AND BREAK SHARP CORNERS SURFACE QUALITY ✓

MATERIAL —"—

FINISH —"—

DRN. C.B. McCoy DATE 9-7-72
CHK'D. NANCY HOOBER DATE 11-1-72
ENG. DATE 11-14-72
PROJ. ENG. DATE
PROD. DATE 11/14/72

NEXT HIGHER ASSY. LPSAG

SCALE —"—

SHEET 2 OF 2

digital EQUIPMENT CORPORATION MAYNARD MASSACHUSETTS

TITLE 4 CHANNEL ±1V IN ±5V OUT PREAMP (D8-1)

SIZE	CODE	NUMBER	REV.
D	CS	A242-Ø-1	D

DIST.

ECO No. A242-00003 Sheet 3 of 3

REVISIONS: REV | CHANGE NO. | CHK

BRUNING 40 322 15840

BRU 102-B